	86485		

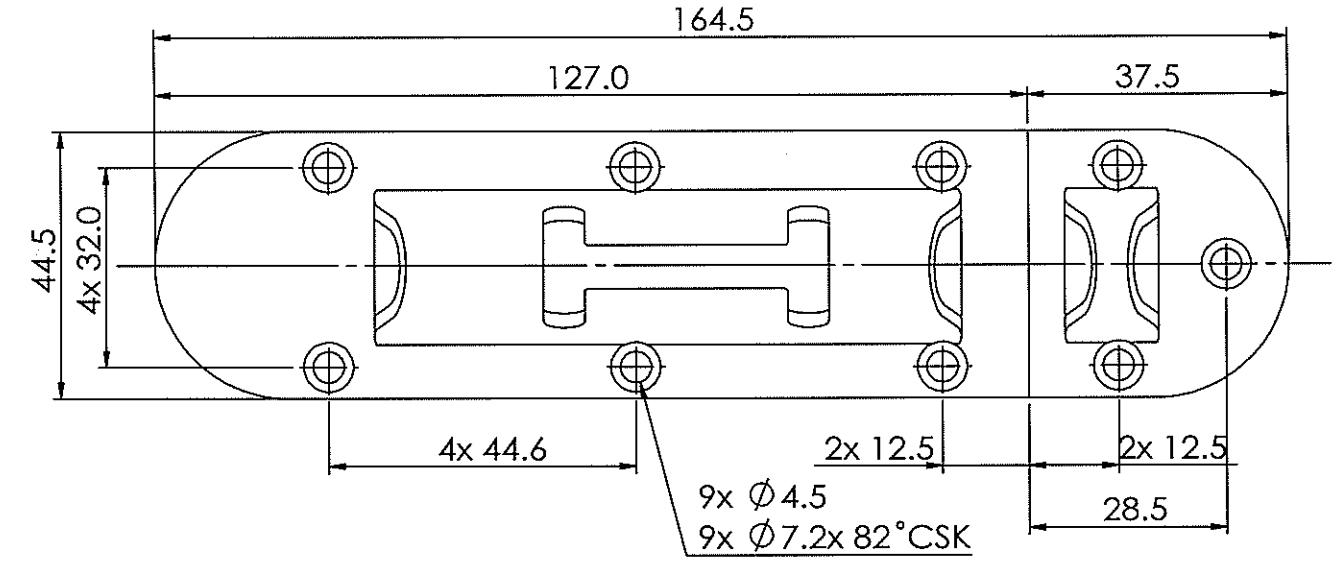

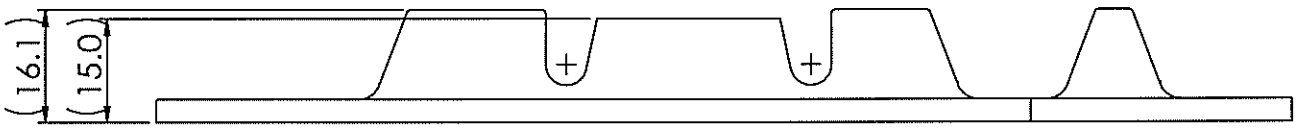

	DRAWING BY (Proxea)	TITLE : TITLE NAME		
	DATE : DD-MM-YY			
TOLERANCE	CHECKED BY :	CUSTOMER : CUSTOMER		
☒ 0 ± 0.5	DATE :			
☒ 0.X ± 0.25	APPROVED BY :	REVISION	MOLD No	MATERIAL
☒ 0.XX ± 0.4	DATE :	A.X	XX-000	316 /304
☒ 0.XXX ± 0.05	SCALE : 1:1	DWG. No. : 86485		REF. No. :
☒ ANGULAR ± 1°				

FDT-FIU-025